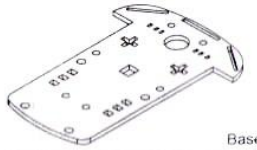

Base Board 1 Piece

Wheel 2 Pieces

Encoder Disc 2 Pieces

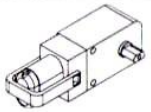

Deceleration DC motor 2 Pieces

Battery container 1 piece

Hammer caster 1 piece

M3*30 Screw 4 bars

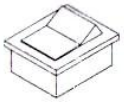

Switch 1 Piece

Fastener 4 Pieces

M3*6 Screw 8 bars

M3 nut 8 Pieces

L12 Spacer 4 bars

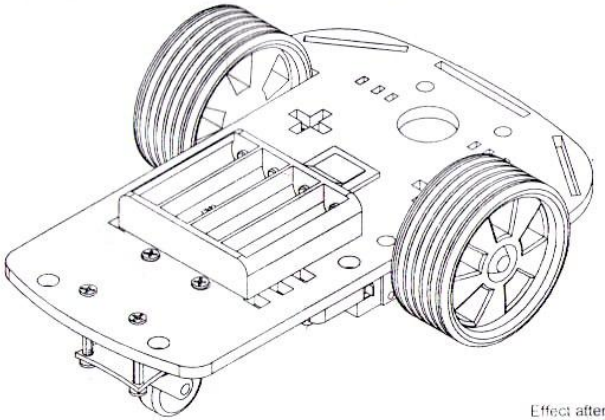

Effect after installation

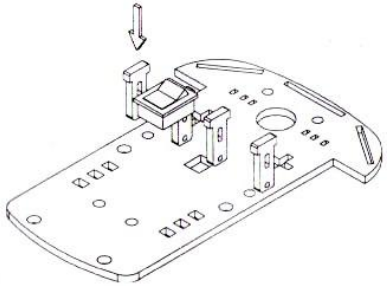

Setp1:Insert the fastener into the chassis after tearing off the yellow protection wrap of the chassis,the fastener and the code wheel.

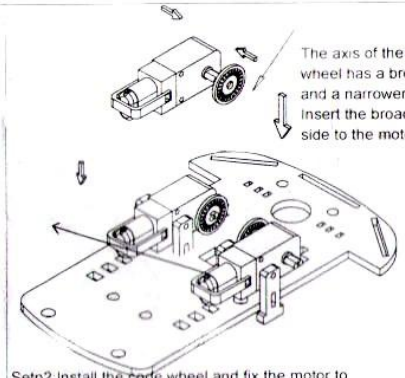

Setp2:Install the code wheel and fix the motor to the chassis.(Attention,the copper sheet of the leading wire of the motor should face inside;the same side of the encoder)

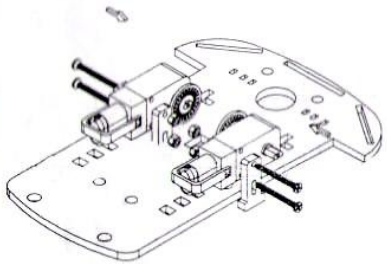

Setp3:Fix the motor to the chassis,then insert and tighten the screws.

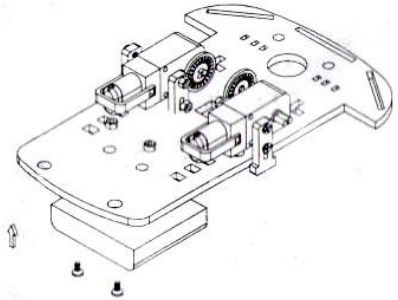

Setp4:Insert the screws and fix the battery container

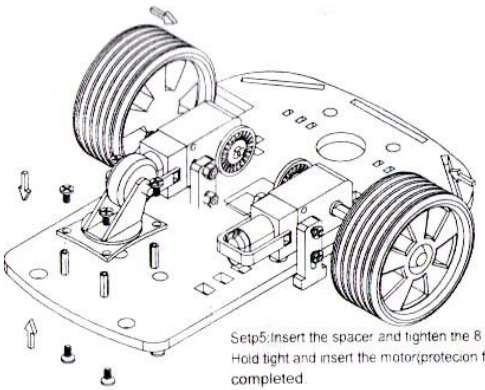

Setp5:Insert the spacer and tighten the 8 screws to fix the hammer caster. Hold tight and insert the motor(protecion fastener) to the wheel.Installation completed.